Chic Lounge

A20V3

The elegant and stylish silhouette emphasizes the representative function of the space. The armchair designed by Christophe Pillet will prove useful in hotel lobbies or lounge areas, but also in office meeting places or boutique spaces.

Collection features:

- characteristic detail in the form of vertical stitching
- two backrest levels – for different needs and different users
- possibility to combine leather and fabric in one cover
- possibility to choose different upholstery colours
- cushion and footrest increase the comfort of rest
- attractive price/quality ratio
- Möbelfakta certificate - a guarantee of durability, safety, environmental care and social responsibility during the production process

Technical specifications:

product version A20V3

armchair, low backrest, wire frame

frame

- MetallicPro
- Chrome
- Black / RAL 9005
- White / RAL 9016
- Light Grey
- Grey
- Deep Green / RAL 6004
- Navy Blue / RAL 5003
- Burgundy / RAL 3005
- Salvia/Green / RAL 6021
- Blue / RAL 5014
- Terracota / RAL 3012

- Gold

glides

- standard - teflon glides
- option - felt glides - for hard floors

shell

metal frame, cold moulded foam

net weight

13,0 kg

gross weight

18,5 kg

Product dimensions:

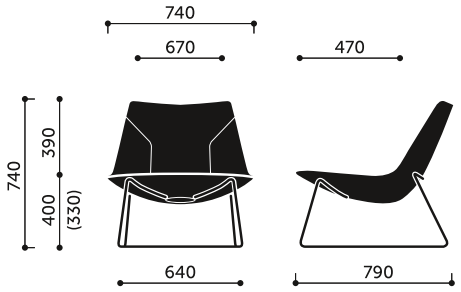

A20V3

Dimensions of other models in the collection:

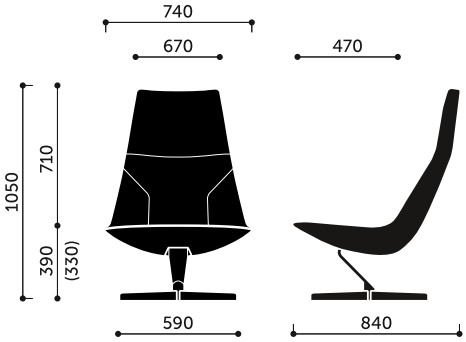

A10F

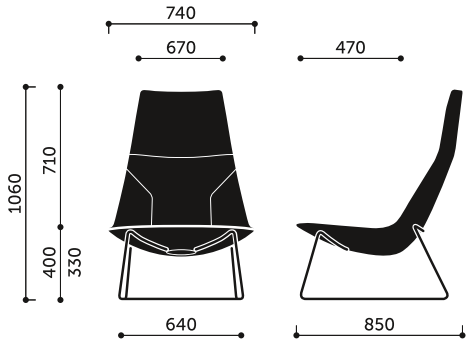

A10V3

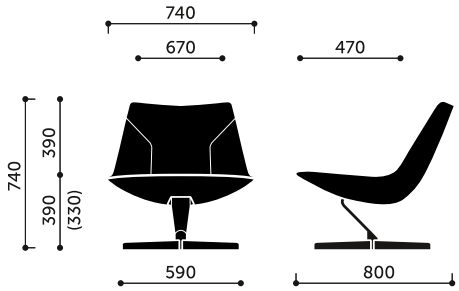

A20F

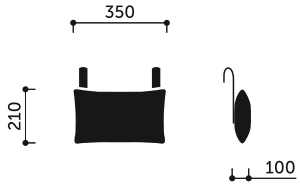

CU

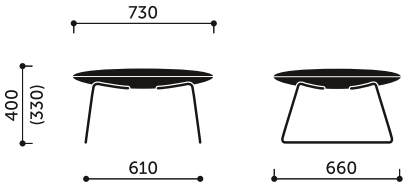

PV3